49.1CGM02.100

Morse Telegraph

ROKR

60PCS / CGM02

⚠ WARNING:

- This product is powered by USB connection and does not contain Type-C power cable, which must be provided by yourself(Input: 5V⎓1A).
- Not suitable for children under 3 years old.
- The product shall only be used with a transformer for product or a power supply for it.
- The product shall be used with the power supply supplied, if the transformer is supplied with the product.
- The transformer or power supply is not a toy or model.
- Misuse of transformer can cause electrical shock.
- The power supply used with the electric toy shall be regularly examined for damage to the supply cord, plug, enclosure or other parts, and in the event of damage, it shall not be used until the damage has been repaired.
- Do not connect the wire to output socket.
- The product is not to be connected to more than the recommended number of power supplies.
- The product contains motor, motor may be a hot component. Do not touch it to avoid burns while operating.
- This product is only to be connected to equipment bearing either of the following symbols: ⚃ or ⊛
- This product does not need liquid cleaning, and please clean the product with clean soft cloth.
- This product contains functional edges and points that are sharp and hazardous. To prevent puncture injuries, adult supervision is required.
- The instruction must be retained since it contains important information.

NOTICE:

- Children should be accompanied by adults while assembling.
- The product contains small parts and electronic components.Adults should guide and supervise children in the correct use of the product to prevent ingestion or choking.
- Please read the instructions carefully before assembly to confirm that the parts are not damaged or missing.
- Take off the pieces from the board according to each step before assembling and place them properly in case of missing.
- Please install the electronic components correctly and test whether the circuit is normal after completion.
- Please don't clean this product with chemical cleaners: alcohol, ammonia water, glass cleaner, etc.
- Please clean the product with clean soft cloth, and sand the board burr lightly with sandpaper.
- Please keep the product away from substances flammable and humid environments to prevent damage.

3 P20 **Part P20 in Bag No. 3**

Special attention in assembly

Flip to assemble

Cut leftover cutting points

1 **Step 1** 2 **Step 2**

Instructions of using the nipper pliers

When cutting, make sure the nipper pliers fit tightly to the parts.



Cut leftover cutting points



1

Scan for assembling videos

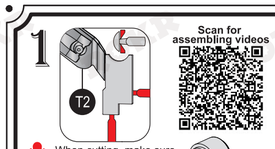

When cutting, make sure the nipper pliers fit tightly to the parts.

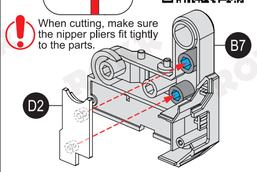

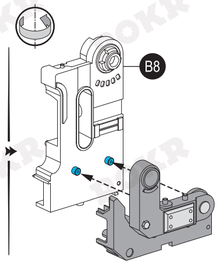

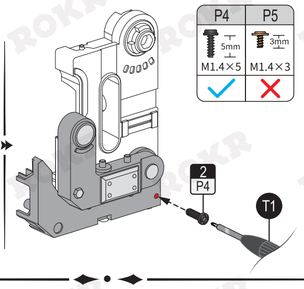

P4	P5
5mm M1.4×5 ✓	3mm M1.4×3 ✗

Cut leftover cutting points

1. Secondary trimming is required to conceal the cutting points.
2. Secondary trimming is required to reduce friction.

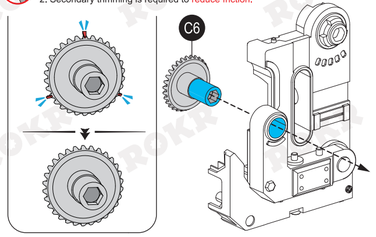

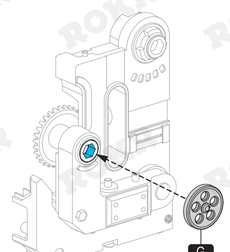

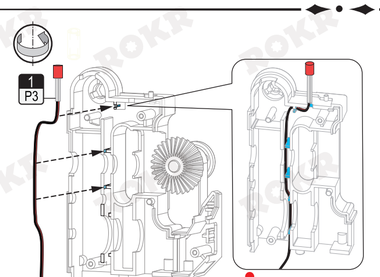

Assemble the wire to the bottom of the wire slot.

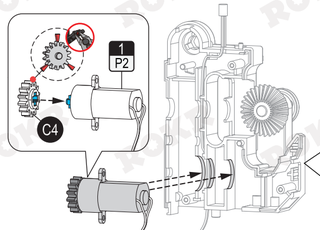

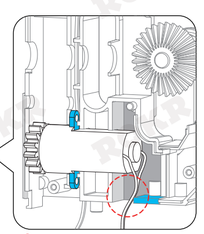

Pay attention to the wire.

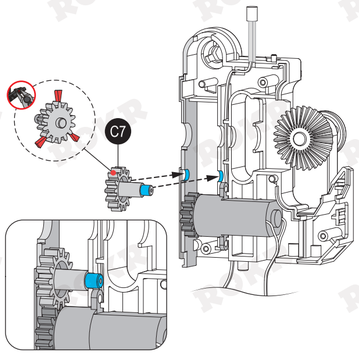

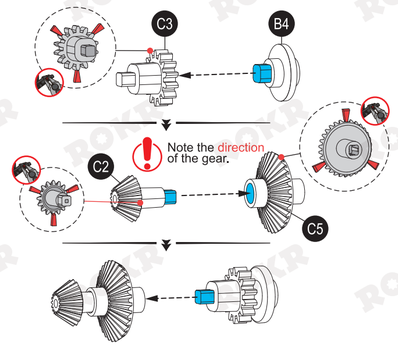

Note the direction of the gear.

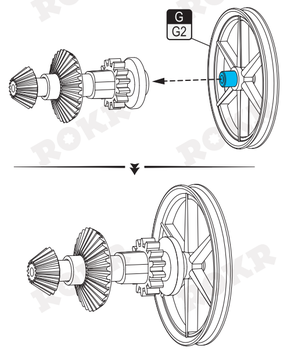

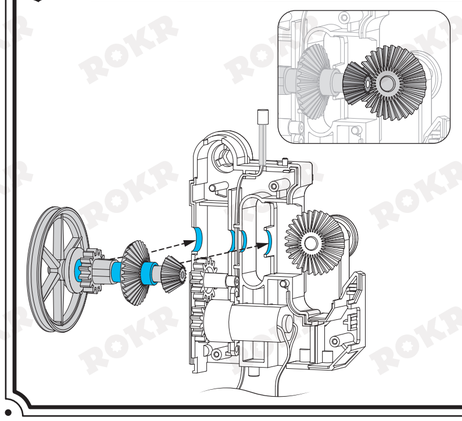

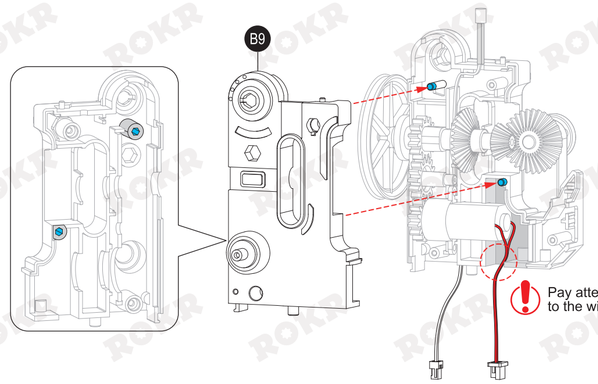

Pay attention to the wire.

2

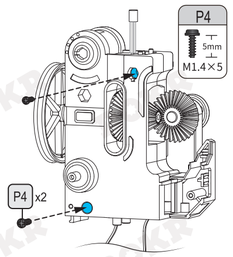

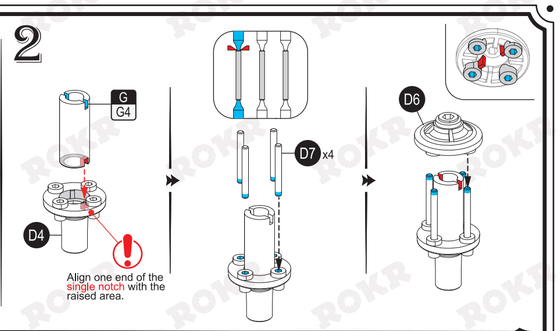

Align one end of the single notch with the raised area.

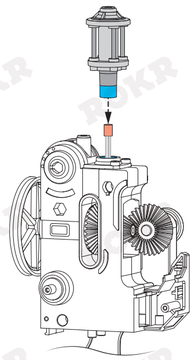

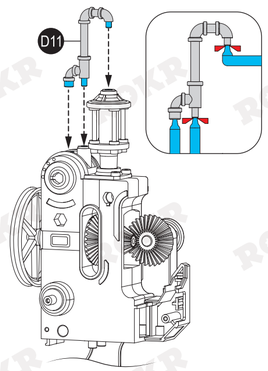

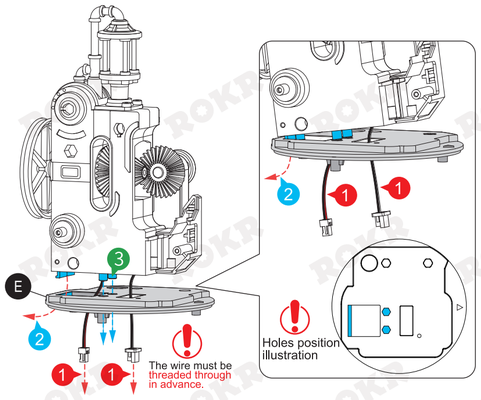

The wire must be threaded through in advance.

Holes position illustration

3

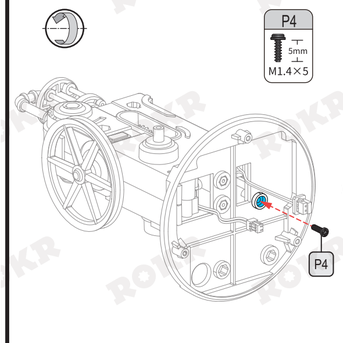

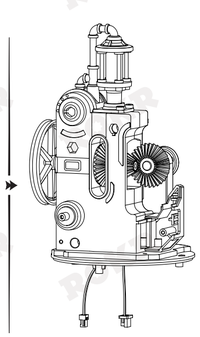

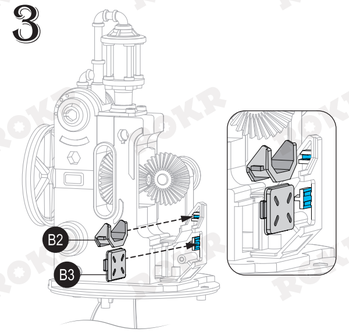

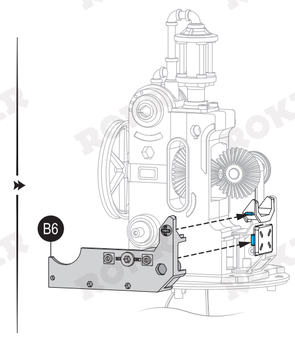

4

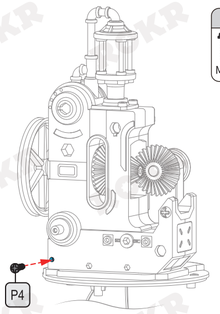

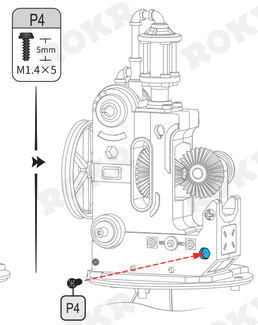

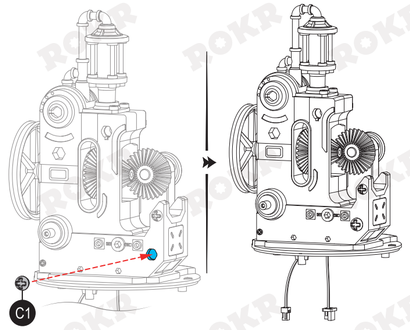

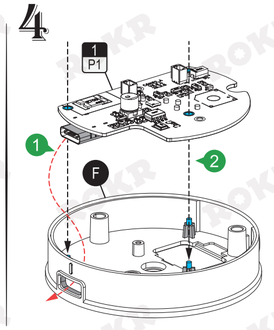

P4	P5
5mm M1.4×5 ✗	3mm M1.4×3 ✓

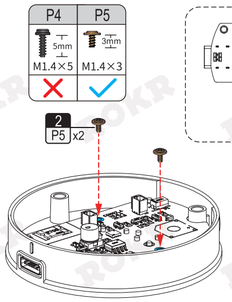

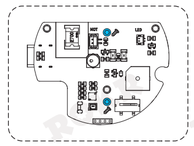

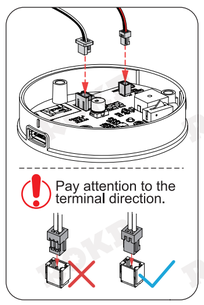

Pay attention to the terminal direction.

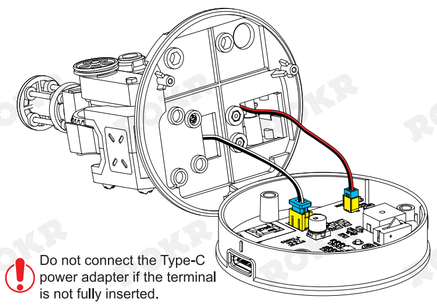

Do not connect the Type-C power adapter if the terminal is not fully inserted.

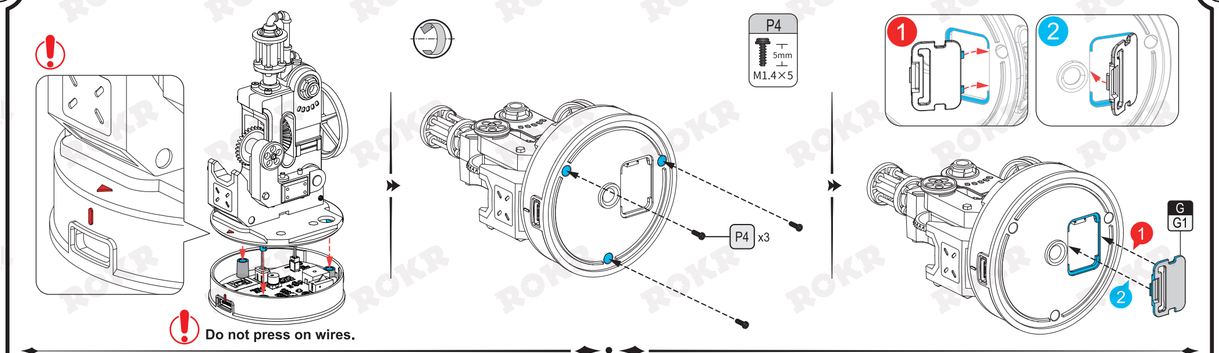

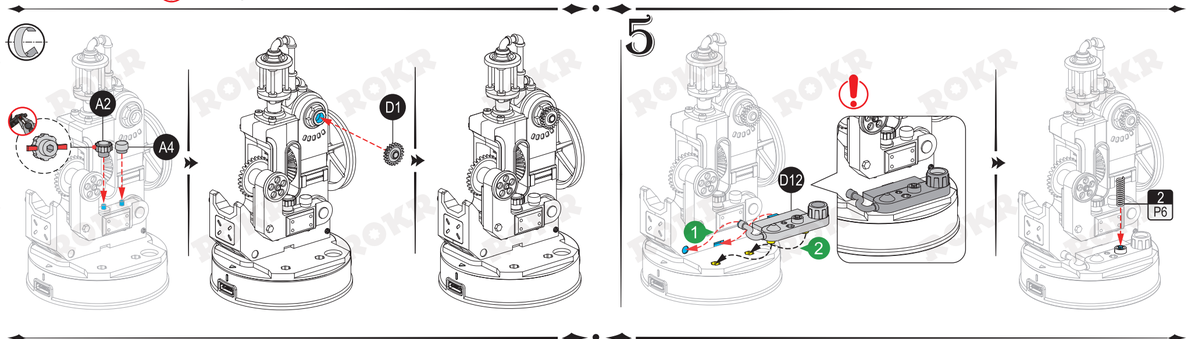

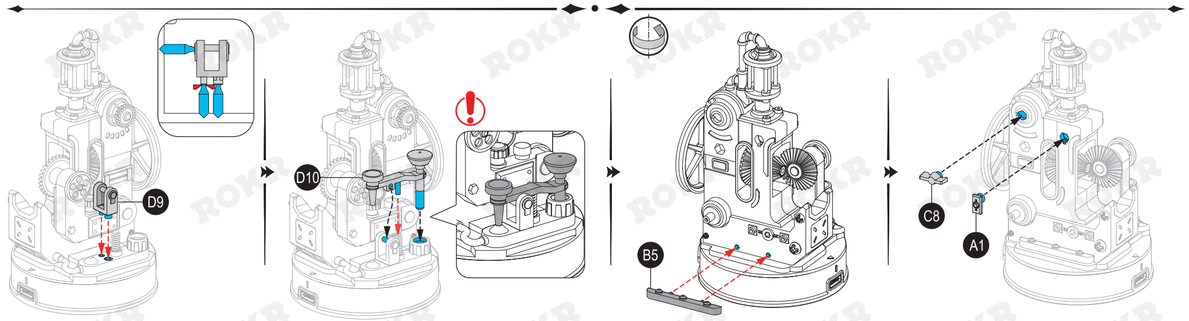

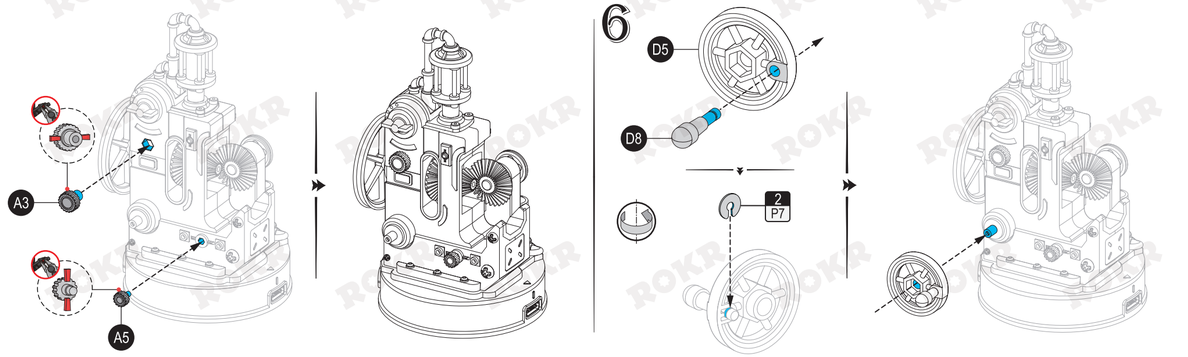

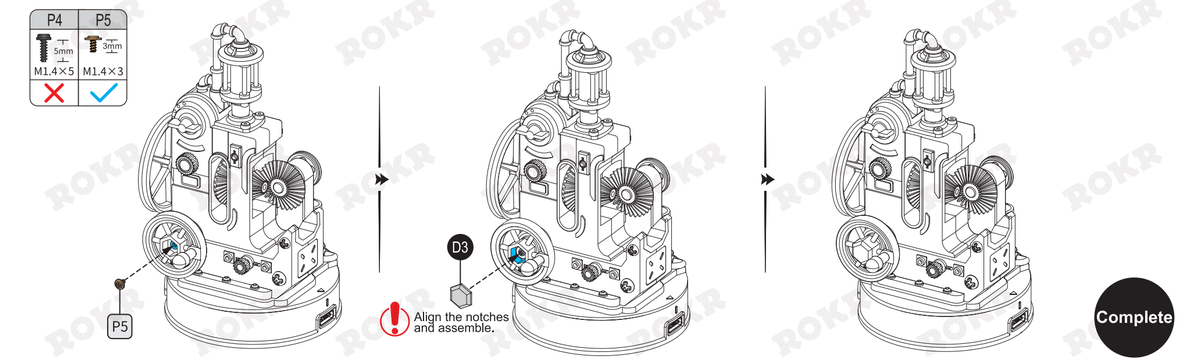

7 Basic Gameplay(Only 1 Model)

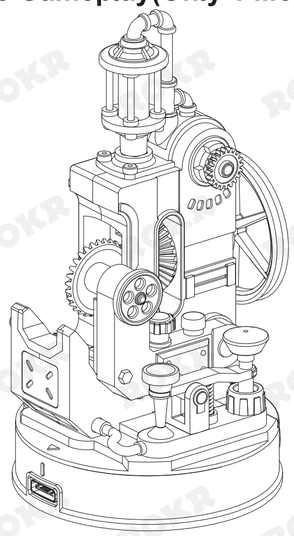

1 Connect to the power supply: Lights up. (Universal Type-C port)

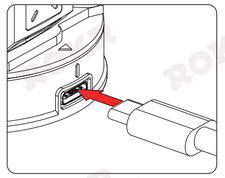

Self-prepare a Type-C cable.
Input power supply: 5V ⎓ 1000mA
Note: Over-current protection provided, adapters ≥ 1000mA are acceptable.

2 Single click: Power on (lights up and motor rotates) (Can last for 20 minutes.)

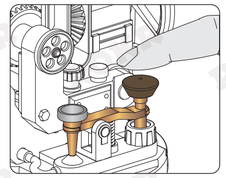

3 Click: Emits a "beep" sound, light flashes.

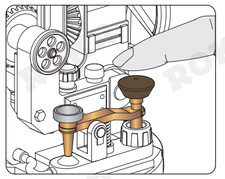

4 Long press: Power off
(Emits three "beep" sounds and then powers off.)

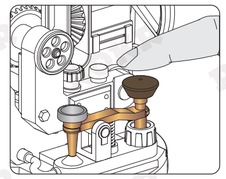

8 Advanced Gameplay (Multiple Models Connection)

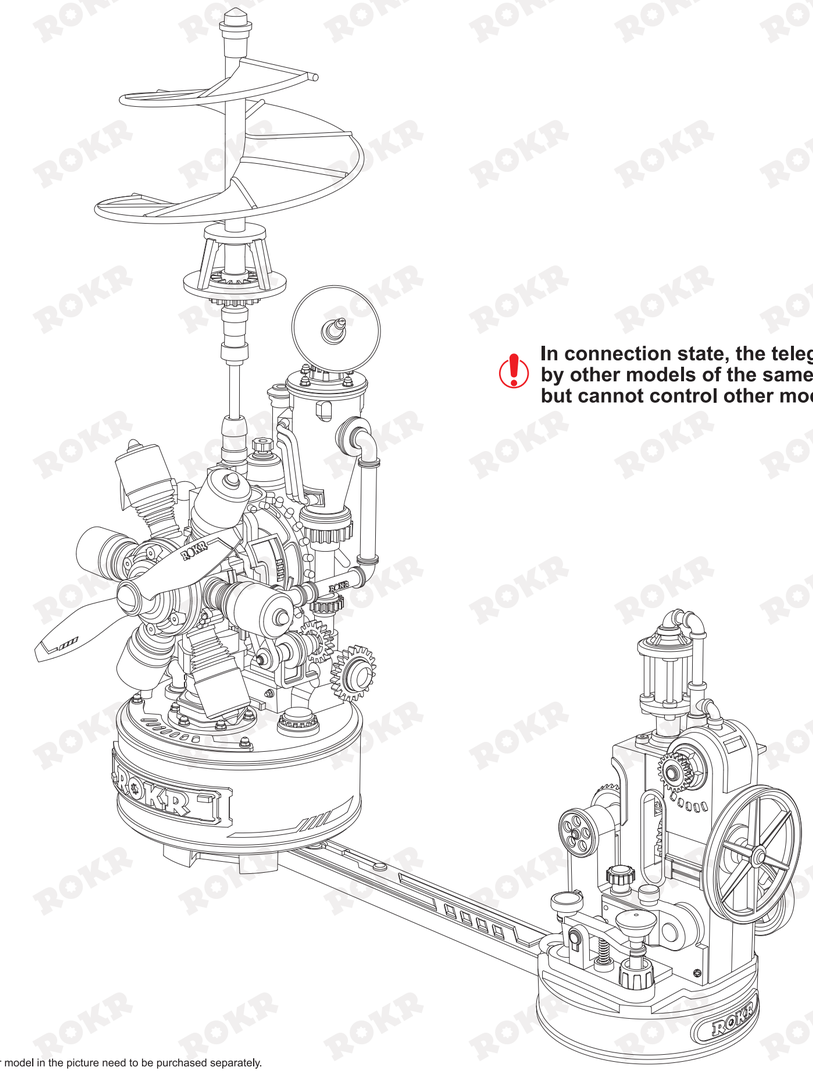

In connection state, the telegraph can be controlled by other models of the same series, but cannot control other models.

The other model in the picture need to be purchased separately.